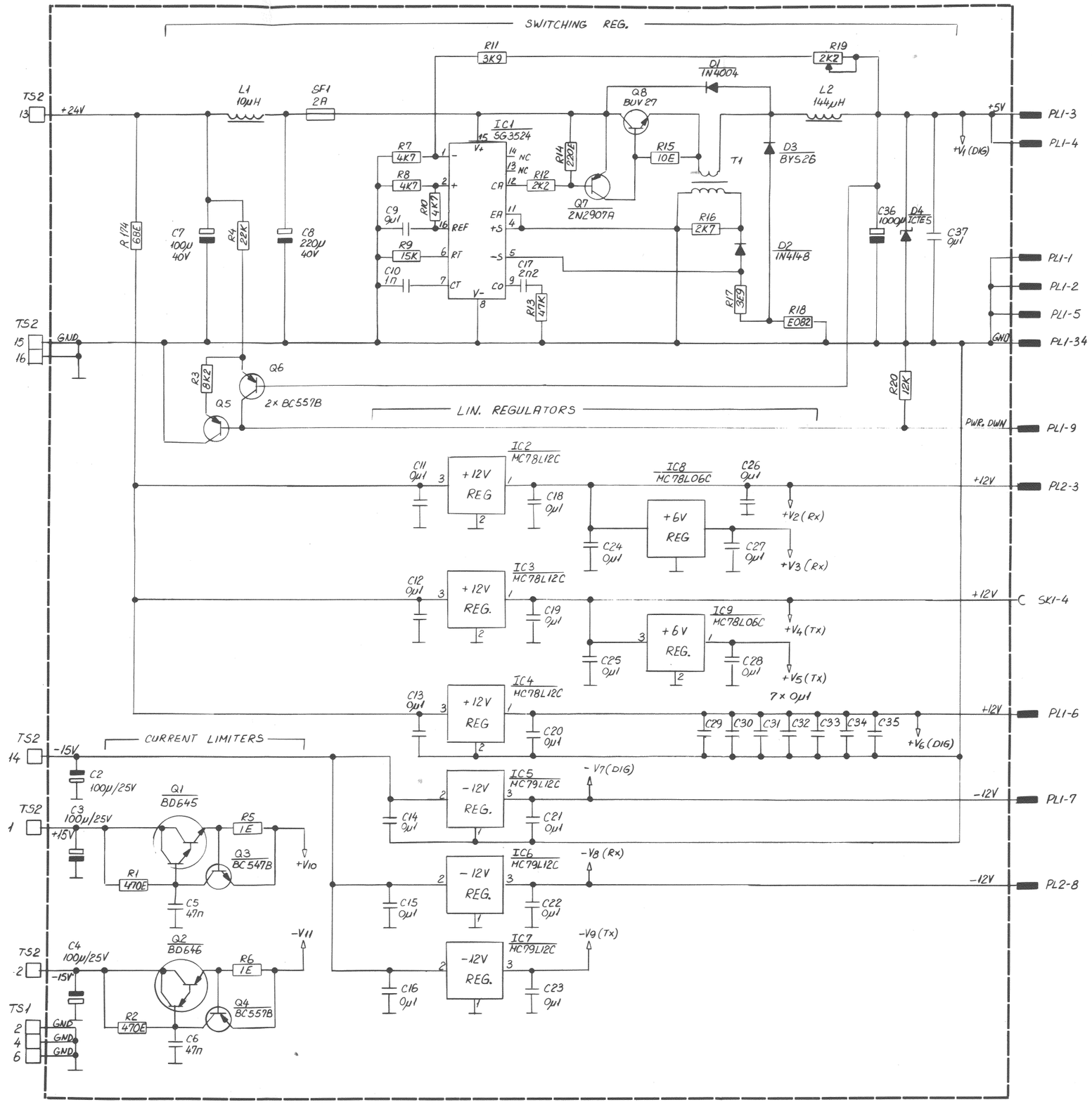

601 SUB DIAGRAM 1 VERSION 3A